PRODUCT DIMENSIONS

THE DESIGN, DETAILS, AND THIS DOCUMENT ARE THE PROPERTY OF GAMBER-JOHNSON

PART NUMBER:	PWM-HZL	**DESCRIPTION:**	PREMIER WALL MOUNT HORIZON LARGE	**WEIGHT (LBS):**	5	**RATING (LBS):**	160

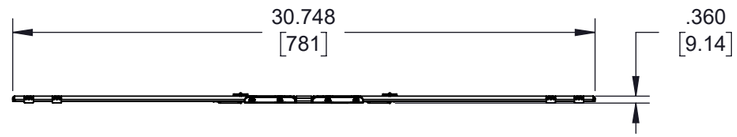

MINIMUM VESA EXTENSION

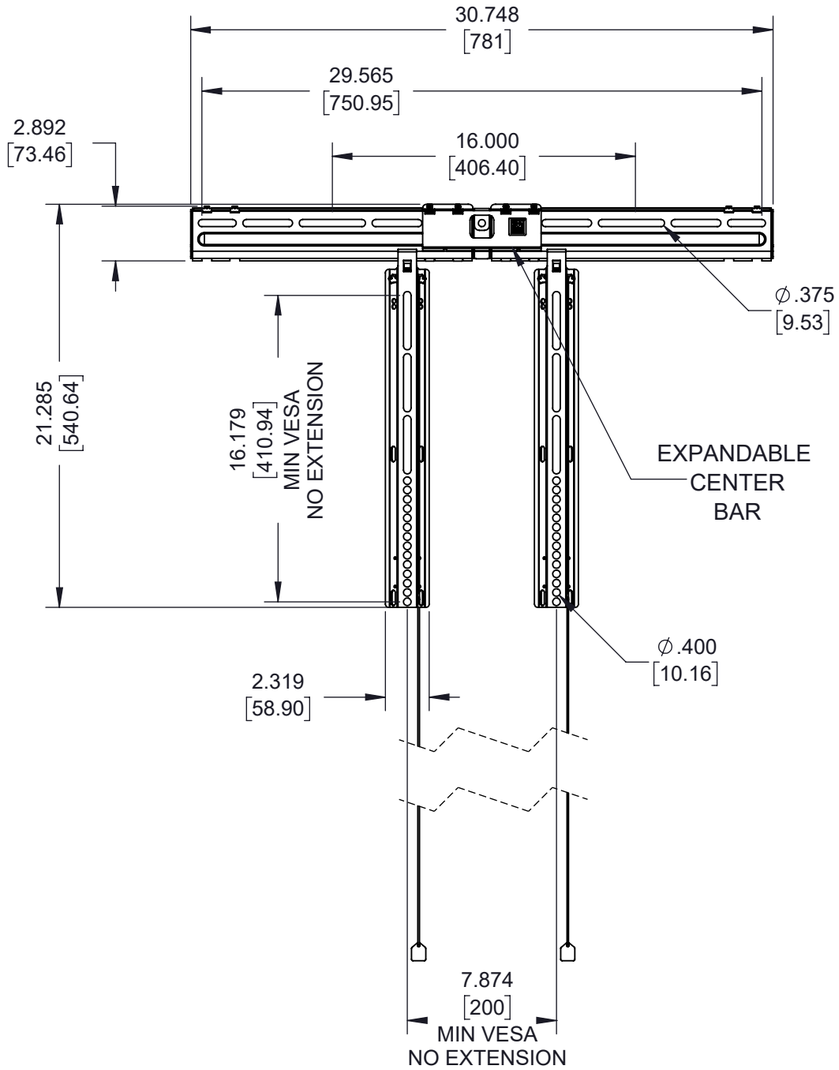
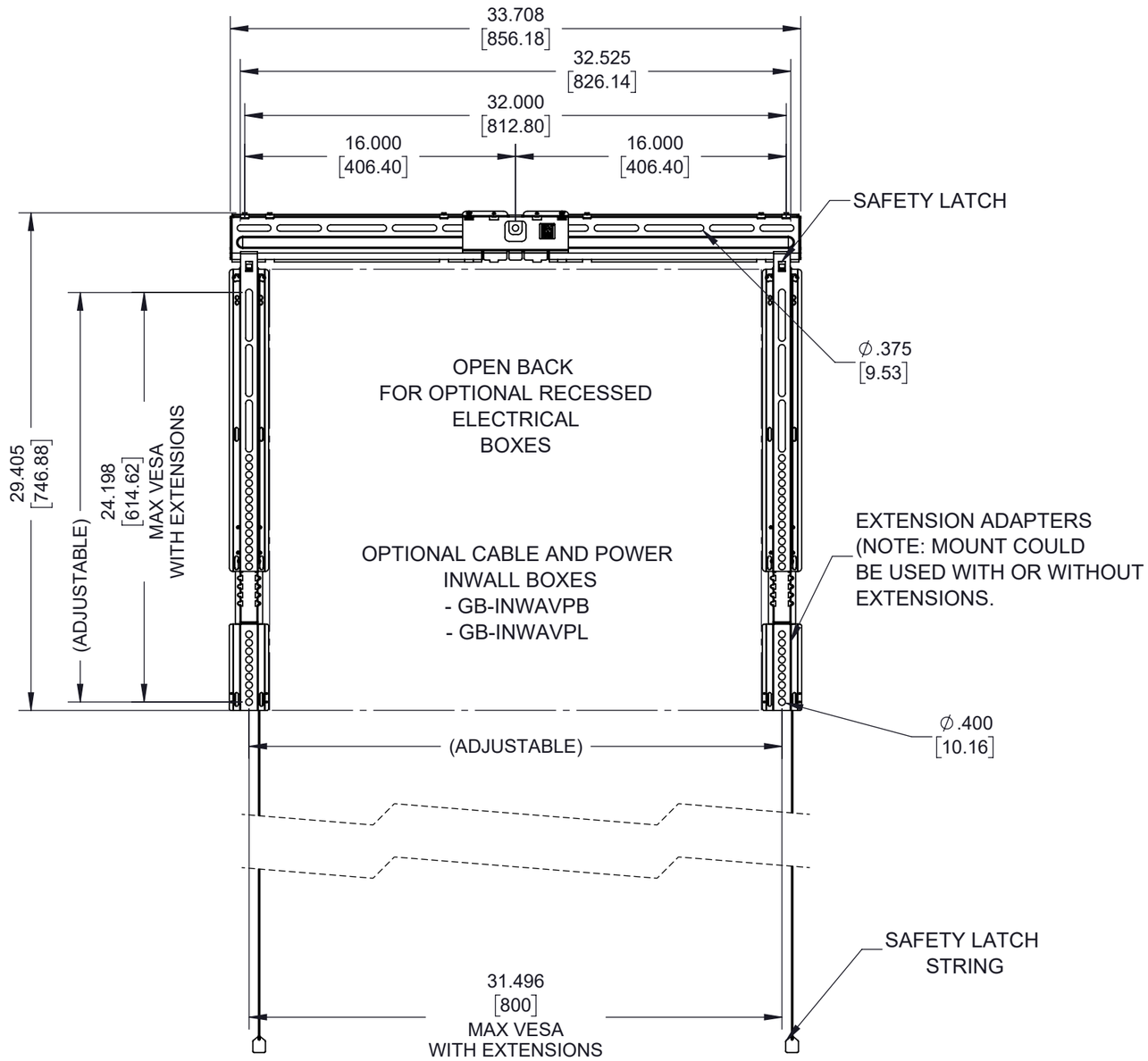
MAXIMUM VESA EXTENSION