THE INFORMATION ON THIS DOCUMENT IS THE SOLE PROPERTY OF PREMIER MOUNTS DIVISION OF GAMBER-JOHNSON AND SHALL NOT BE COPIED, REPRODUCED, USED OR DISCLOSED IN WHOLE OR IN PART WITHOUT THE WRITTEN CONSENT OF PREMIER MOUNTS DIVISION OF GAMBER-JOHNSON.

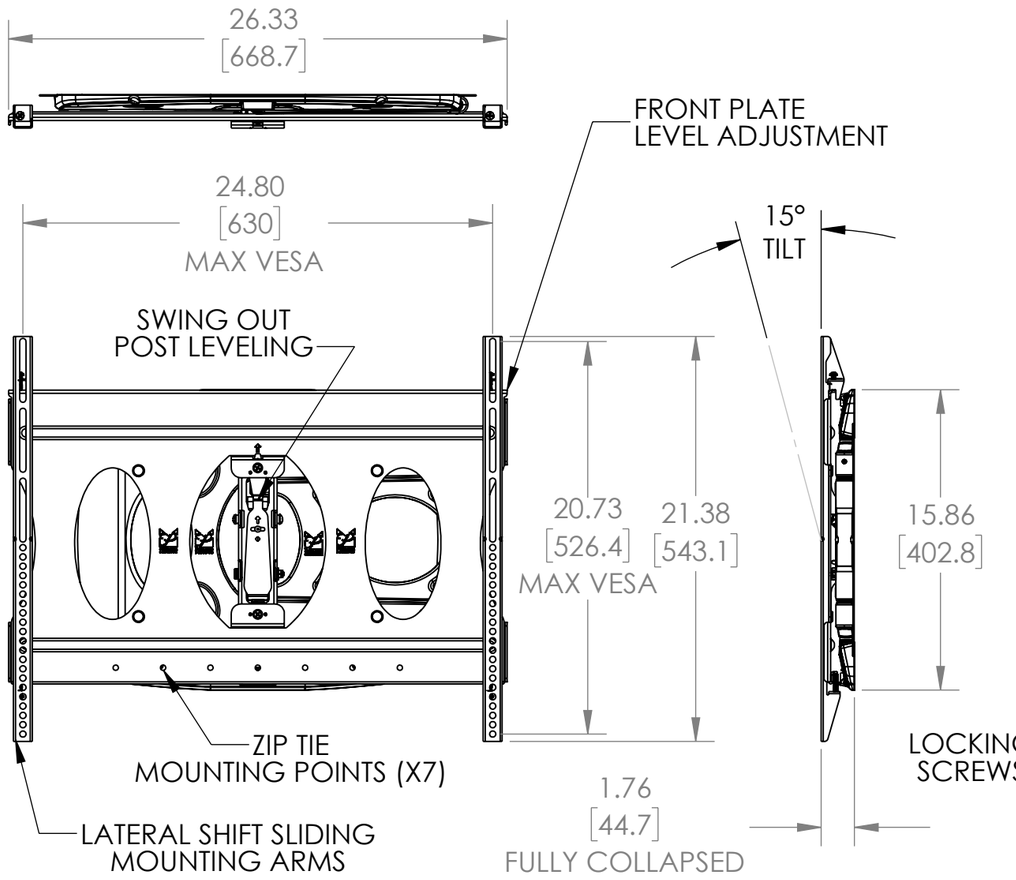

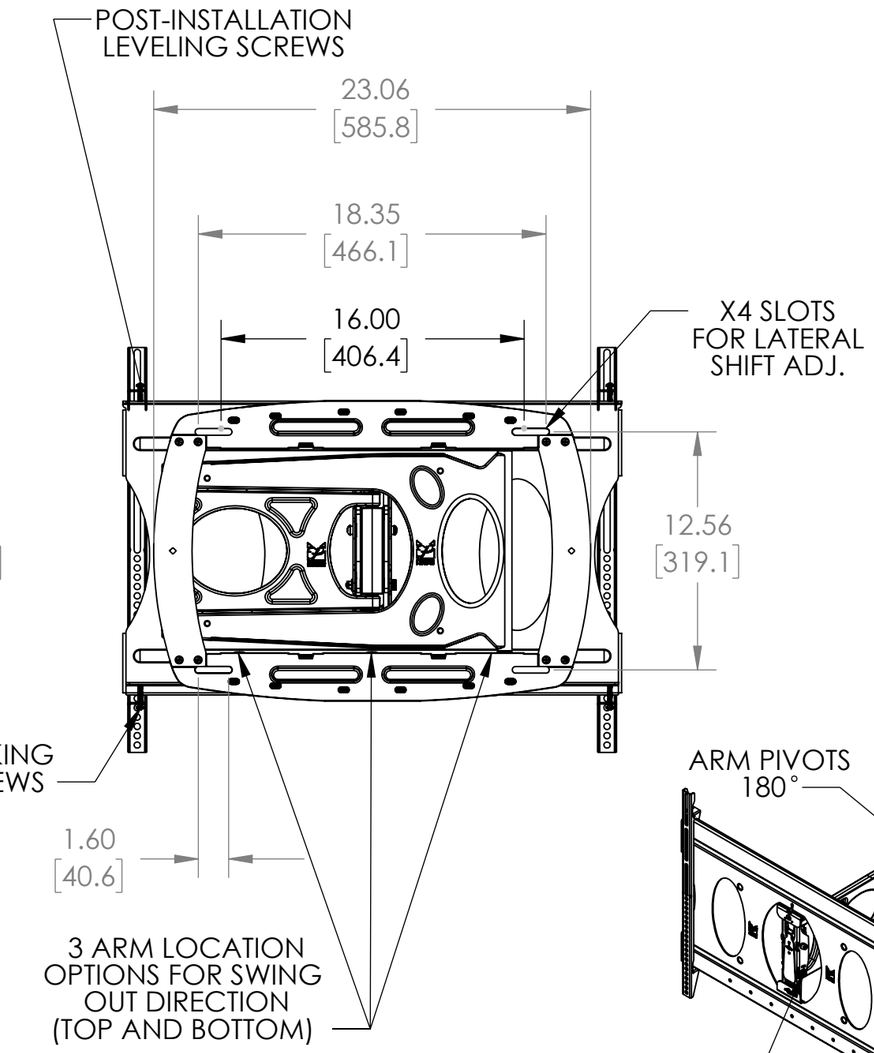

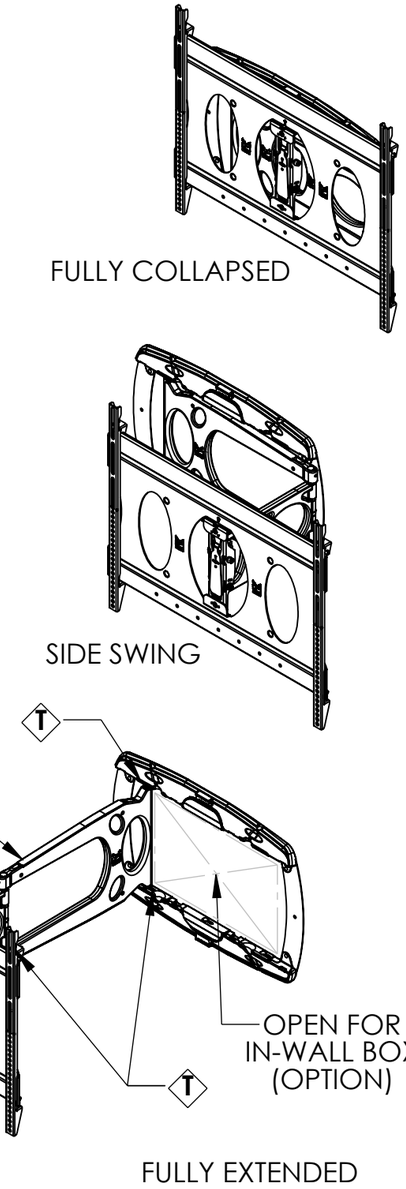

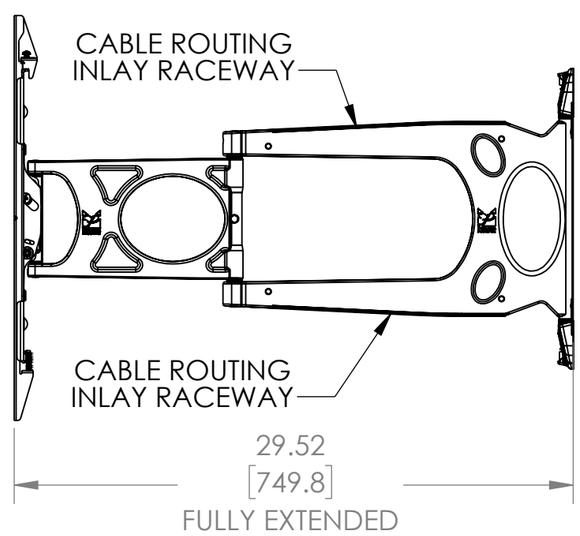

T: TENSION ADJUSTMENT

DESCRIPTION: LOW-PROFILE ULTRA SLIM SWINGOUT ARM				
PART NO. AM100				
MAX. WEIGHT CACITY 100.0 LB.	DIMENSION ARE IN INCH AND [MM]	SCALE: 1:8	SHEET 1 OF 1	

PREMIER MOUNTS

PREMIERMOUNTS.COM

WEIGHT CAPACITY: 100 LBS